PRATER®
AIRLOCKS • MILLS • SEPARATORS

Air Classifying Mills

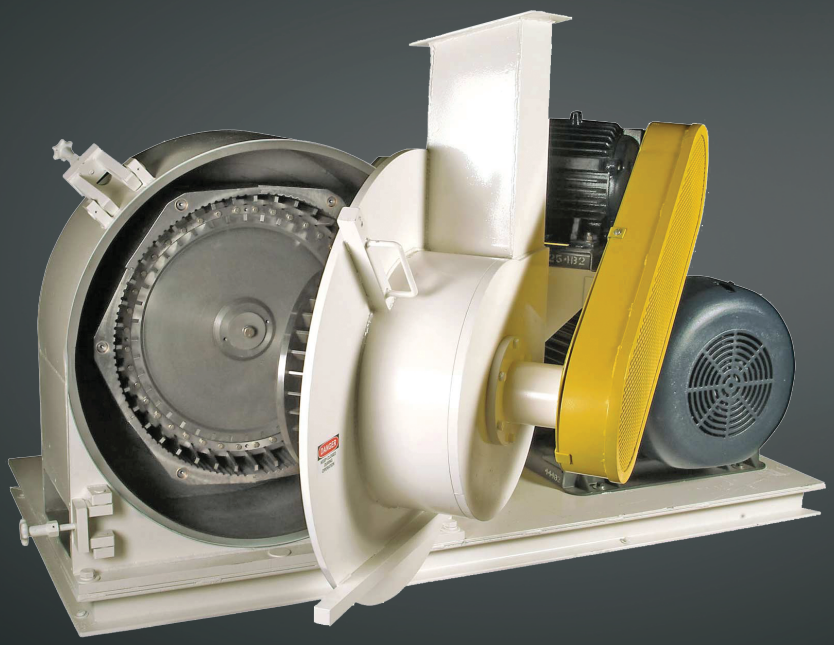

KEY FEATURES

- Durable, welded carbon steel or stainless steel construction
- Precision tolerances between rotor blade and grinding jaw or screen for uniform size-reduction
- Two-stage, closed circuit grinding for ultra-fine size reduction
- Interstage air classification for precise, on-line control and adjustment of particle size
- Large screen to horsepower ratio for greater capacity in each model
- Interchangeable screen & jaw combinations for more versatility
- Large access door and simplified interior for easy cleaning and maintenance
- Grinding blades, screens and jaws designed for easy replacement with minimal tools
- Outboard mounted spindle with high grade labyrinth seals for maximum bearing life
- Reversible rotor
- Standard-shaft grounding brush mitigates against internal electrostatic discharge
- Optional bearing monitoring package to compliment existing predictive maintenance programs
- Ten-Bar shock-pressure-resistant construction available
- Sanitary construction features available
- Minimal and quick maintenance
- Optional screen-free design to ensure minimal wear and tear

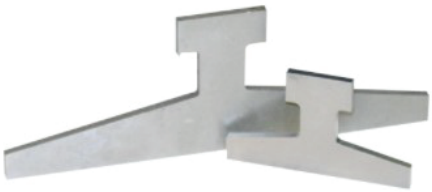

Replaceable Grinding Blades

Sieve Ring Assembly with Six Jaws

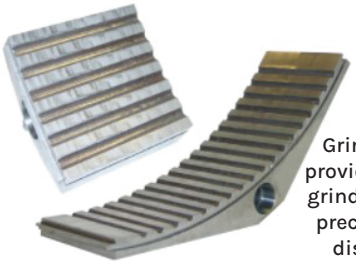

Grinding Jaws provide for a finer grind and a more precise particle distribution

GENERAL DIMENSIONS *

Model	HP Mill	HP Classifier	Nominal Airflow CFM	A (in mm)	B (in mm)	C (in mm)
CLM-18	3	0.5	150	11 279	21 533	12.875 310
CLM-36	30-50	2	800	19.5 495	35.875 911	28.375 721
CLM-51	50-100	5	1500	35 889	50 1270	42.125 1070
CLM-76	75-150	10	3000	42 1067	63.5 1613	56 1522
CLM-101	125-300	15	6000	53.5 1359	78.5 1994	72.5 1842

* Do not use for engineering purposes. Please request a certified drawing for all layout or construction purposes.

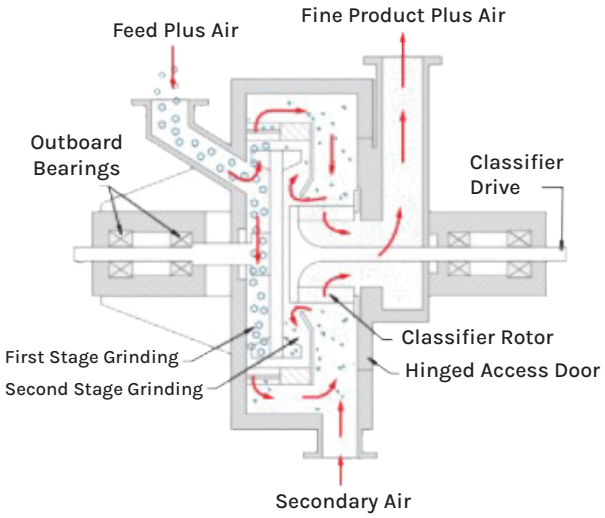

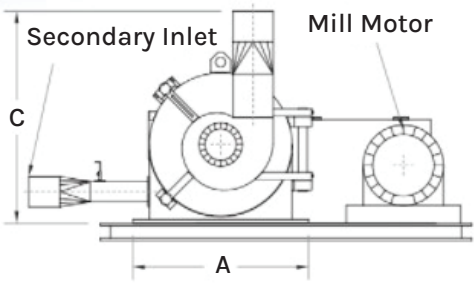

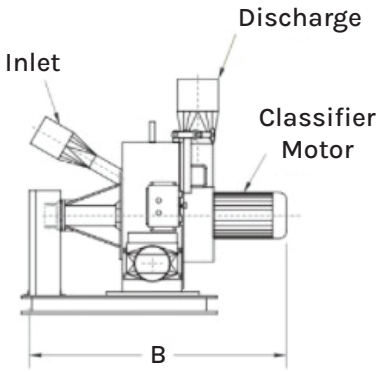

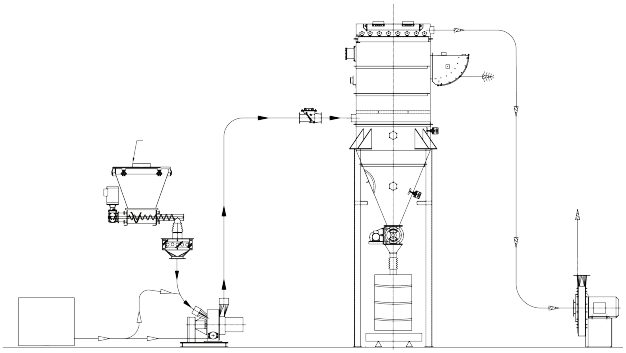

KEY BENEFITS

The unique capabilities of the Prater Air Classifying Mill (CLM) are designed to produce a finer grind and a narrower particle size distribution than standard mill designs. The Prater CLM mill is suitable for achieving separations from 149 micron on down with mean particle sizes as fine as 5 microns.

Prater Air Classifying Mills (CLM) offers the combination of two-stage closed circuit grinding with internal air classification. Their unique capabilities out perform single-pass mills when handling difficult to grind products or those requiring a narrow particle size distribution. The Optional screen-less screen frame design reduces screen damage and wear while the secondary inlet provides additional air for an element of cooling.

Six sizes are available from the 3 HP CLM-18 pilot scale lab mill to the 250 HP CLM-101. All Air Classifying Mills come with standard safety features, including an automatic safety door interlock that prevents unintended access to internal rotating parts during operation.

Benefits of Prater CLM mills include:
- **Final particle size range from 149 microns down to a mean size of 5 to 7 microns**
- **Capability to grind challenging materials**
- **Narrow particle size distribution made easy**
- **Highly uniform particle distribution**
- **Proven lower ΔT, temperature rise of the material from input to output, versus competitors from use of secondary pneumatic airflow**

THEORY OF OPERATION

Three separate steps are taken when processing material through a Prater Classifier Mill:

First Stage Grinding. Convey air and metered product enter behind the rotor, where grinding blades impact and accelerate particles outward. Additional collisions take place against the jaws and screens until the particles are small enough to egress through the screen's apertures.
Classifier. Particles from first stage grinding are circulated outside the grinding chamber, where a secondary intake drafts pneumatic air to help fluidize and cool the particles. Material is pulled inward toward the classifying rotor, where size separation takes place. On-size particles pass through the rotor and are pneumatically conveyed to the next stage in the process while off-spec particles are rejected to second stage grinding. The air classifier rotor is independently controlled, allowing for precise control of particle size simply by adjusting the RPM using a Variable Frequency Drive, VFD.
Second Stage Grinding. Rejected particles from the classifier re-enter the grinding chamber in front of the rotor. Grinding blades again impact and accelerate the particles outward, where size reduction is intensified by 360 degrees of aggressive grinding ring segments. Reground, second stage product combines with product from the first stage and then returns to the classifier.

2 Sammons Court, Bolingbrook, IL 60440
1-844-942-2466 • praterindustries.com